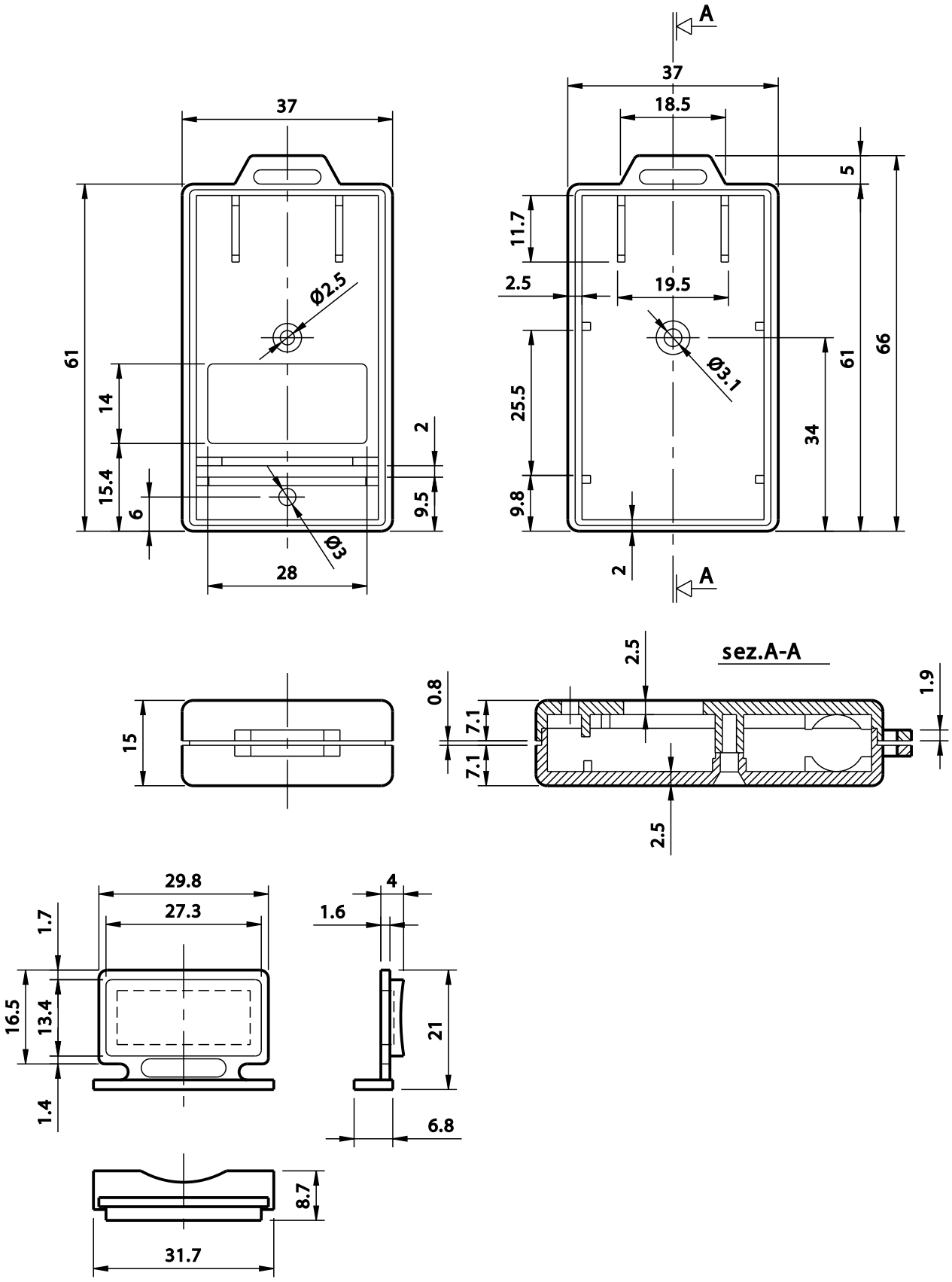
A
37
18.5
5
11.7
2.5
19.5
Ø2.5
Ø3.1
61
66
14
25.5
34
2
15.4
9.8
6
9.5
Ø3
28
2
A
sez.A-A
2.5
0.8
1.9
15
7.1
7.1
2.5
29.8
27.3
4
1.6
1.7
16.5
13.4
21
1.4
6.8
8.7
31.7

10120