嘉尼企業股份有限公司CANAL ELECTRONIC CO.,LTD.

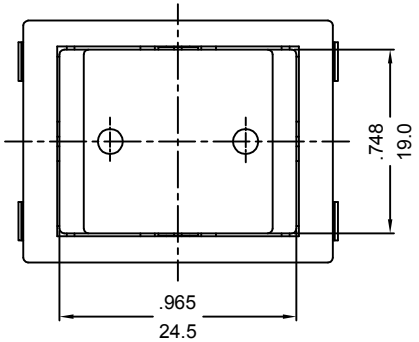

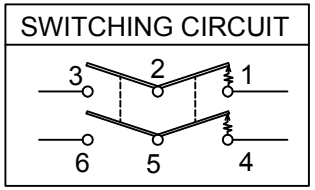

ROCKER SWITCH MODEL: R SERIES

RATING:16A 125/250VAC(UL/CUL)
16(4)A 250V~ μT85/55(ENEC15/CQC) △2
DIELECTRIC WITHSTAND VOLTAGE: 1000VAC 1 MINUTE
INSULATION RESISTANCE: 500VDC 100MΩ (MIN)
CONTACT RESISTANCE:20mΩ INITIAL (MAX.)

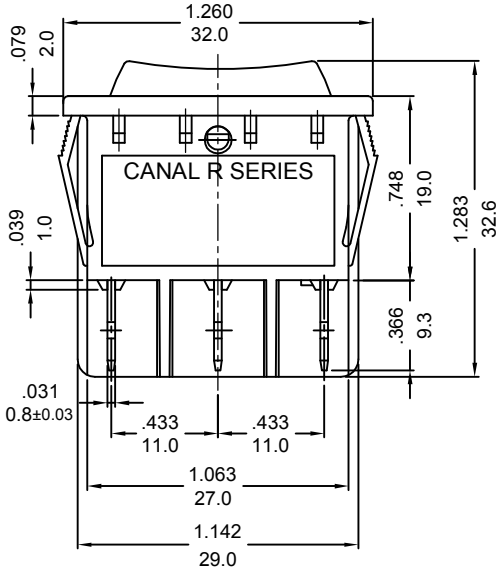

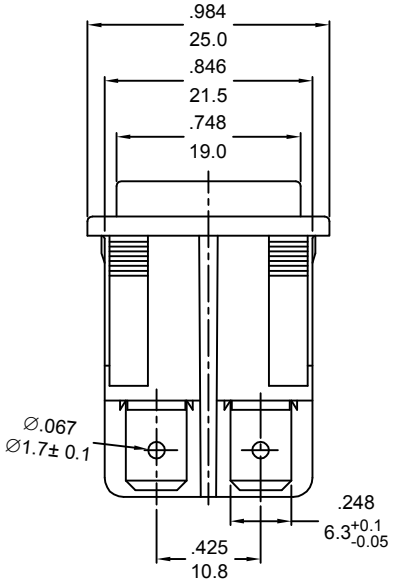

嘉尼工程
2023.05.19
文件管制章

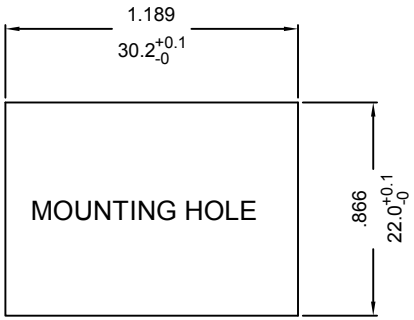

X=(0.75 TO 1.25mm)
PANEL THICKNESS

NOTE: TOLERANCES UNLESS OTHERWISE SPECIFIED:± .012/0.3 (in/mm)

REVISION	DESCRIPTION	REVISED BY	TOLERANCES				ANGLE ½°	UNIT	mm	PART NAME	R SPEC DRAWING	DWG NO
△4			DRAWN BY	謝平凡	DESIGNED BY	蔡 劍	SCALE	5/4				S6576B
△3												
△2 2023.05.18	取消VDE，改用ENEC15	达志各	CHECKED BY		APPROVED BY		DATE	2016.06.06		PART NO	R260-1C2N-BBA-NNC	
△1 2016.06.06	首次出圖	謝平凡										