METZ CONNECT
We realize ideas

Data sheet

Connection line M12 plug straight - M12 jack straight 8-pole, X-coded 10.0 m

P/N 142M2X12100
EAN 4250184198369

2017-10-10

Illustrations

Dimensional drawing

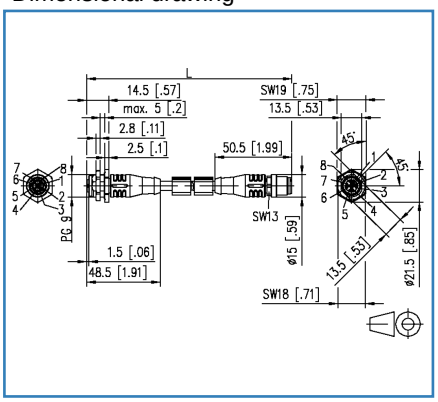

Cut-out

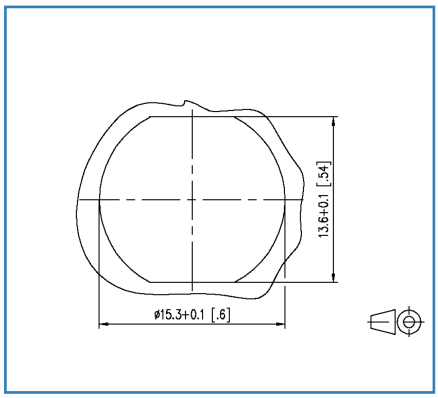

See enlarged drawings at the end of document

Product specification

- shielded M12 Ethernet connection line
- Cat.6_A, 8 pole, X-coded
- M12-jack, straight on M12 connector, straight
- extrusion-coated cable on M12 connectors
- stranded wires 4x2xAWG26/7 PiMF
- overall shield tinned copper braid
- 1:1 pin assignment
- green cable, PUR
- a protective cap is included in scope of delivery

- variants: 1.0 m, 2.0 m, 5.0 m, 10.0 m
- other cable lengths on request

© 2017 METZ CONNECT - Technische Änderungen vorbehalten! Subject to modifications! Sous réserve de modifications techniques!

Data sheet

Connection line M12 plug straight - M12 jack straight 8-pole, X-coded 10.0 m

P/N 142M2X12100

EAN 4250184198369

2017-10-10

Technical Data

General Data	
Fields of application	
	Industrial Ethernet
Design	Ethernet-Connection line
Shielding	shielded
Transmission technology	Copper
Cable Type	S/FTP
Number of twisting elements	4
Twisting element	Pair
Wiring	1 - 1
Color coding fiber/ wire(s)	white/orange, orange, white/green, green, white/brown, brown, white/blue, blue
Color	green
Dimensions	
Dimension - Interface 1 (L x W x H)	48.50 x 18.00 x 21.50 mm
Dimension - Interface 1 (L x W x H)	1.909 x 0.709 x 0.846 in.
Dimension - Interface 2 (L x W x H)	50.50 x 15.00 x 15.00 mm
Dimension - Interface 2 (L x W x H)	1.988 x 0.591 x 0.591 in.
Cable length (m)	10.00 m
Cable length (ft)	32.81 ft

Transmission characteristics	
Category (ISO)	6_A
Transmission rate up to 10 GBit	IEEE 802.3an

Connections/interfaces	
Connector technology interface 1	M12-jack
Connector technology interface 2	M12-plug
Coding interface 1	X-coded
Coding interface 2	X-coded
Number of positions/contacts interface 1	8
Number of positions/contacts interface 2	8

© 2017 METZ CONNECT - Technische Änderungen vorbehalten! Subject to modifications! Sous réserve de modifications techniques!

Data sheet

Connection line M12 plug straight - M12 jack straight 8-pole, X-coded 10.0 m

P/N 142M2X12100

EAN 4250184198369

2017-10-10

Technical Data

Connections/interfaces	
Termination data, stranded wire (min. - max.)	
Conductor cross section, stranded wire	AWG 26/7
Conductor cross section, stranded wire	0.141 mm²
Conductor diameter, stranded wire (bare copper)	0.483 mm
Conductor diameter, stranded wire (bare copper)	0.019 in.
Cable sheath diameter (min. - max.)	
Cable sheath diameter	6.40 mm
Cable sheath diameter	0.236 in.
Electrical characteristics	
Current carrying capacity	0.5 A
Insulation resistance	min. 100 MOhm
Mechanical characteristics	
Bending radius without load	min. 64 mm
Materials and material properties	
Material - Conductor	Cu (copper)
Material - Cable jacket	PUR
Material - Body interface 1	Plastics
Material - Body interface 2	Plastics
Material - Contact interface 1	CuZn (brass)
Material - Contact interface 2	CuZn (brass)
Material - Contact finish interface 1	Au (gold)
Material - Contact finish interface 2	Au (gold)
Material - Contact carriers interface 1	Plastics
Material - Contact carriers interface 2	Plastics
Material - Union nut interface 1	CuZn (brass)
Material - Union nut interface 2	CuZn (brass)
Material - Union nut finish interface 1	Ni (nickel)
Material - Union nut finish interface 2	Ni (nickel)
Material - Main shield	Cu (copper) braid
Material - Main shield finish	Sn (tin)
Flame retardancy	yes

© 2017 METZ CONNECT - Technische Änderungen vorbehalten! Subject to modifications! Sous réserve de modifications techniques!

Data sheet

Connection line M12 plug straight - M12 jack straight 8-pole, X-coded 10.0 m

P/N 142M2X12100

EAN 4250184198369

2017-10-10

Technical Data

Environmental conditions	
Temperature (min. - max.)	
Temperature - Storage °C	-30 - 90 °C
Temperature - Storage °F	-22 - 194 °F
Temperature - Operating °C	-30 - 90 °C
Temperature - Operating °F	-22 - 194 °F
Particulate ingress interface 1	IP6X when plugged in
Liquid ingress/immersion interface 1	IPX7 when plugged in
Particulate ingress interface 2	IP6X when plugged in
Liquid ingress/immersion interface 2	IPX7 when plugged in
Pollution degree interface 1	3
Pollution degree interface 2	3
Approvals	
RoHS	compliant
The product meets the following standards	
Generic cabling systems	
General requirements	ISO/IEC 11801-1 | DIN EN 50173-1
Multi-element metallic cables used in analogue and digital communication and control	DIN EN 50288-4-1
Test for vertical flame propagation for a single insulated wire or cable	DIN EN 60332-1-2
Measurement of smoke density of cables burning	DIN EN 61034
Classifications	
ETIM 5.0	EC002599
ETIM 6.0	EC002599
Packing details	
Type of packaging	1 pc(s) / plastic bag
Packaging unit - Weight (gram)	114.00 g
Packaging unit - Weight (pound)	0.25 lb

© 2017 METZ CONNECT - Technische Änderungen vorbehalten! Subject to modifications! Sous réserve de modifications techniques!

Data sheet

Connection line M12 plug straight - M12 jack straight 8-pole, X-coded 10.0 m

P/N 142M2X12100

EAN 4250184198369

2017-10-10

Illustrations

Dimensional drawing

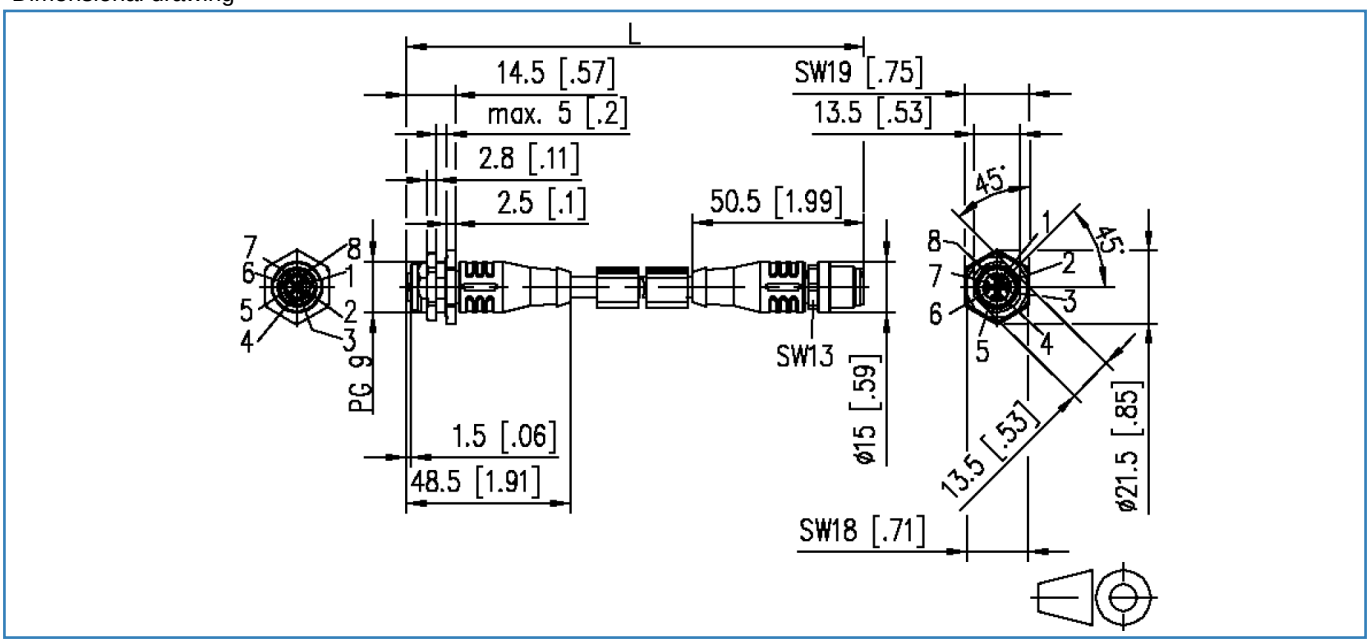

Cut-out

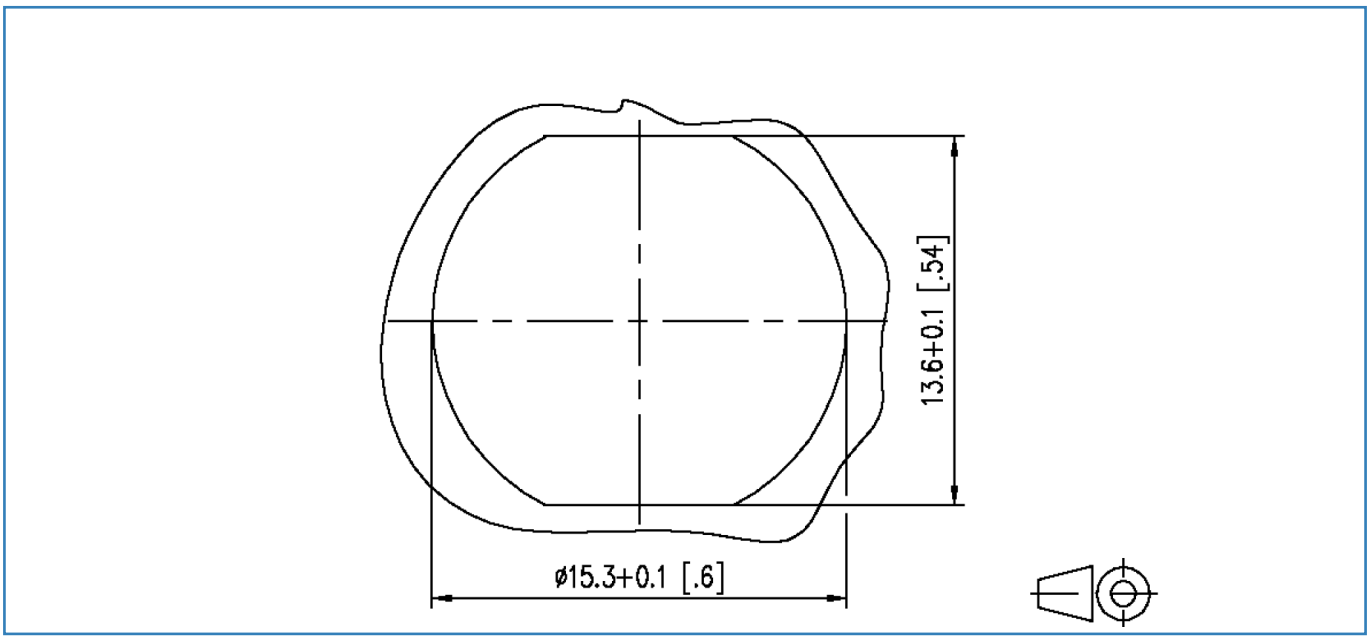

© 2017 METZ CONNECT - Technische Änderungen vorbehalten! Subject to modifications! Sous réserve de modifications techniques!

Data sheet

Connection line M12 plug straight - M12 jack straight 8-pole, X-coded 10.0 m

P/N 142M2X12100
EAN 4250184198369

2017-10-10

Illustrations

Wiring

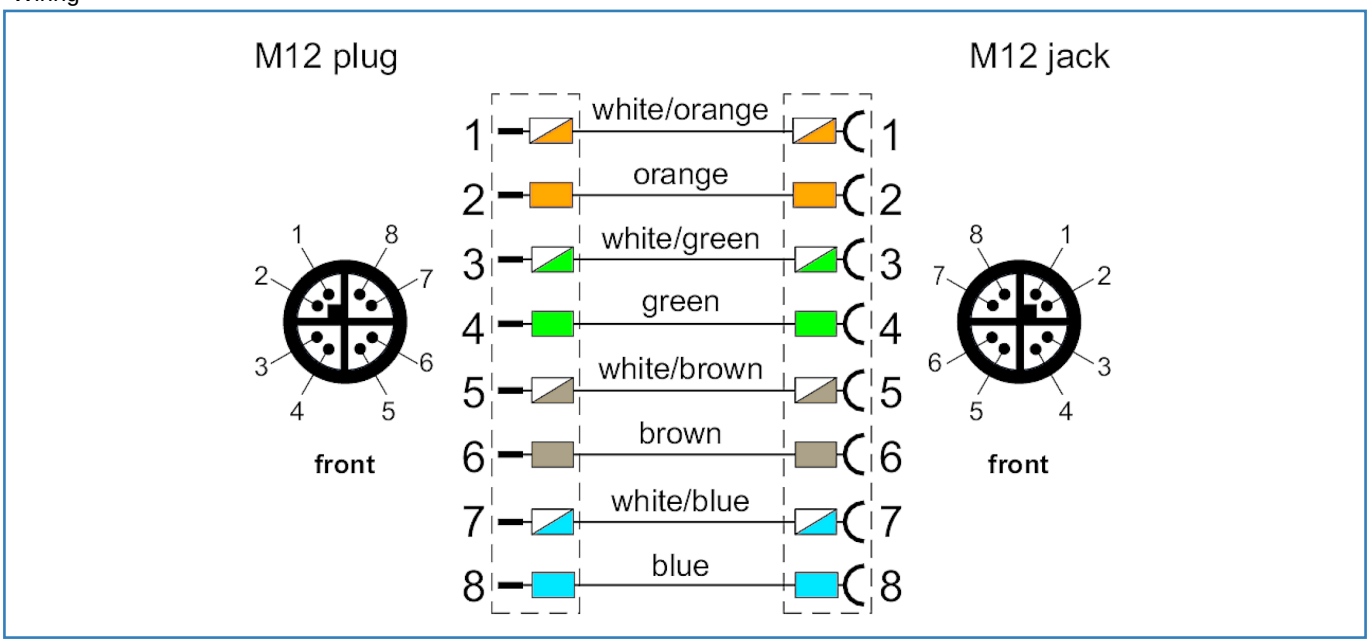

© 2017 METZ CONNECT - Technische Änderungen vorbehalten! Subject to modifications! Sous réserve de modifications techniques!