嘉尼企業股份有限公司 CANAL ELECTRONIC CO.,LTD.

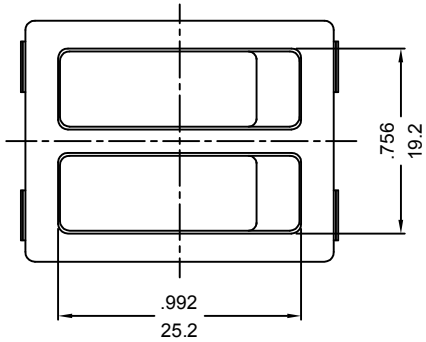

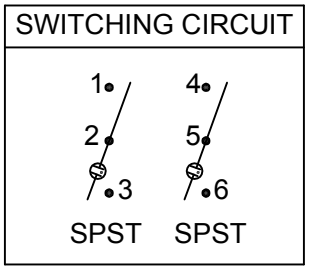

Pole on/off illuminated

ROCKER SWITCH MODEL: R SERIES

RATING:16A 125/250VAC (UL/CUL)
20A 125VAC (UL/CUL)
16(4)A 250V~T125/55 (ENEC15/CQC) △2
DIELECTRIC WITHSTAND VOLTAGE: 1000VAC 1 MIN
INSULATION RESISTANCE:500VDC 100MΩ (MIN)
CONTACT RESISTANCE:20mΩ INITIAL(MAX.)
ILLUMINATION: 100~125VAC

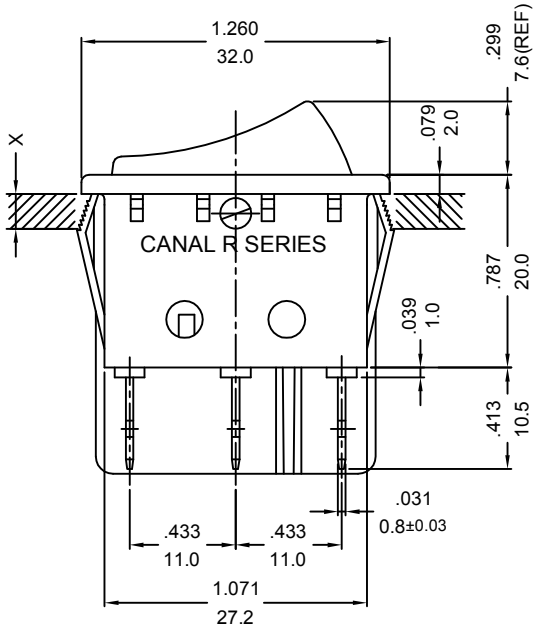

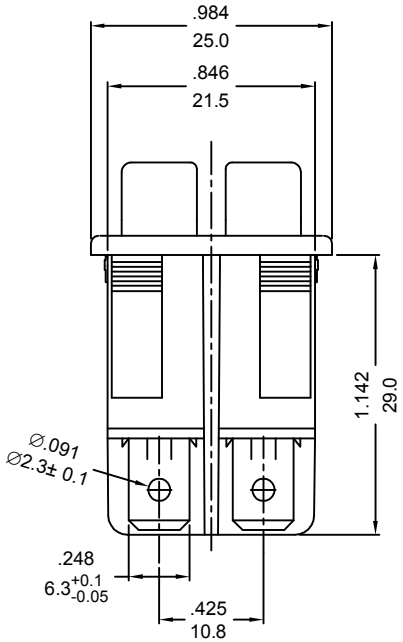

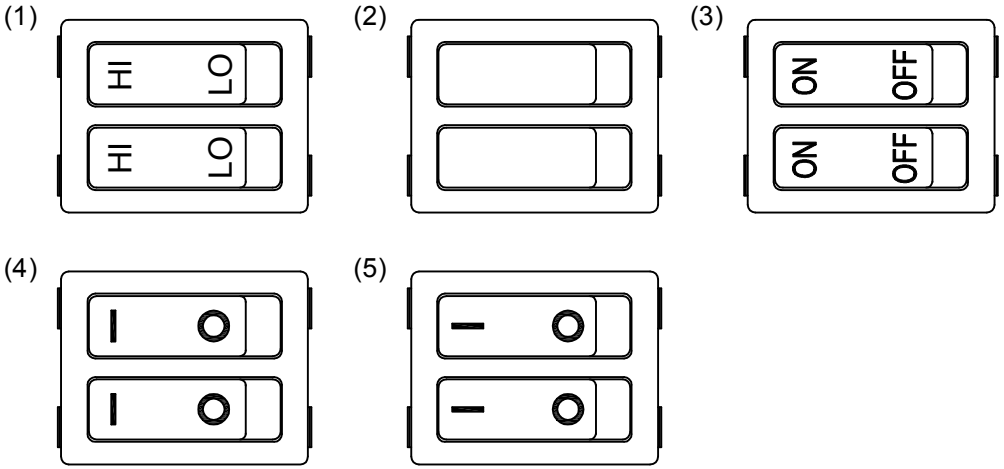

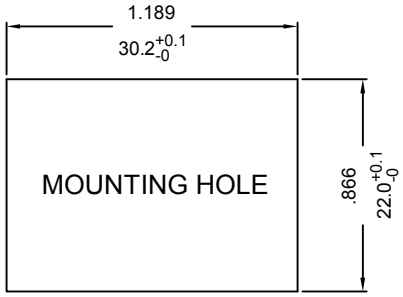

X=(0.75 TO 1.25mm)
PANEL THICKNESS

嘉尼工程
2024.07.19
文件管制章

NOTE: TOLERANCES UNLESS OTHERWISE SPECIFIED:± .012/ 0.3 (in/mm)

REVISION	DESCRIPTION	REVISED BY	TOLERANCES			ANGLE ½°	UNIT	mm	PART NAME	R SPEC DRAWING	DWG NO
△4			DRAWN BY	謝平凡	DESIGNED BY	蔡 劍	SCALE	5/4			S5816B
△3											
△2 2024.07.19	取消VDE，改用ENEC15	达志各	CHECKED BY		APPROVED BY		DATE	2014.11.04	PART NO	R210-2C*L-**N-*C	
△1 2014.11.04	首次出圖	謝平凡									