AS 200

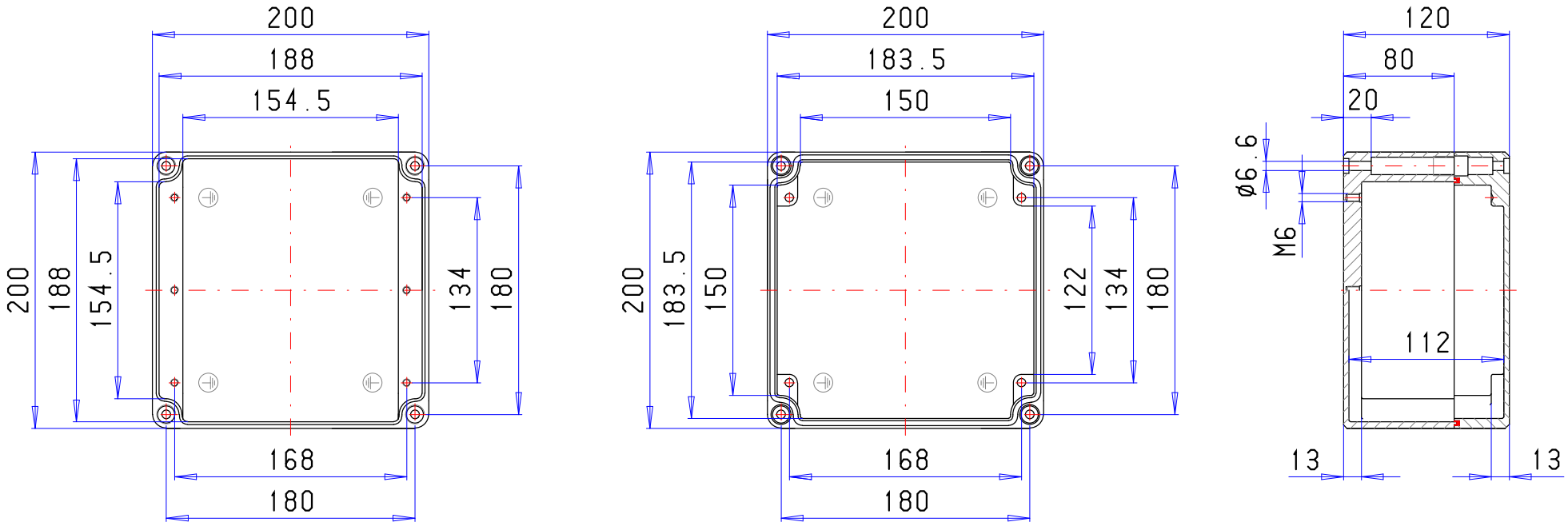
200
188
154.5
200
188
154.5
134
180
168
180
200
183.5
150
200
183.5
150
122
134
180
168
180
120
80
20
ø6.6
M6
112
13
13