嘉尼企業股份有限公司CANAL ELECTRONIC CO.,LTD.

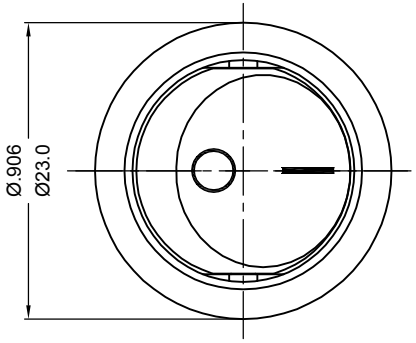

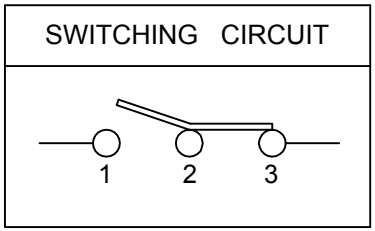

ROCKER SWITCH MODEL MR2 SERIES

RATING:16(8)A 125/250V~ (cURus)
16(8)A 125/250V~T125/55(ENEC15)
16(8)A 250V~ T85 (CQC)
DIELECTRIC VOLTAGE-WITHSTAND:1500VAC FOR 1 MINUTE
INSULATION RESISTANCE: 500VDC 100MΩ (MIN.)
CONTACT RESISTANCE:20mΩ INITIAL (MAX.)

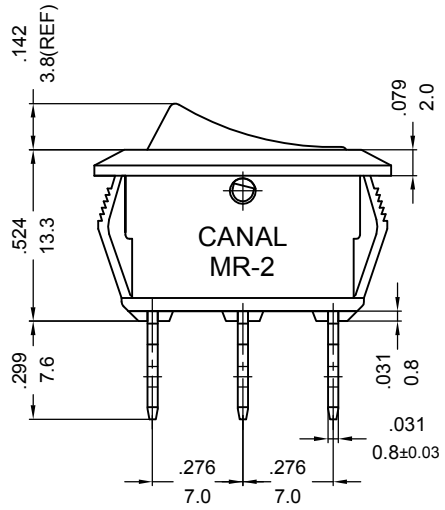

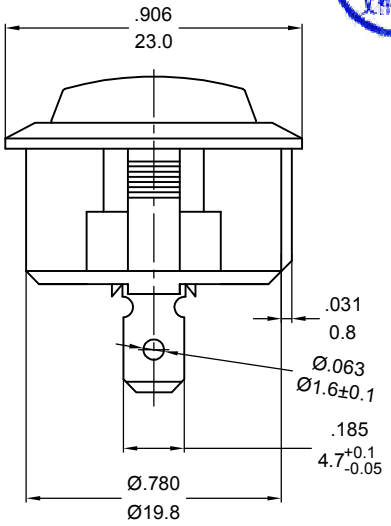

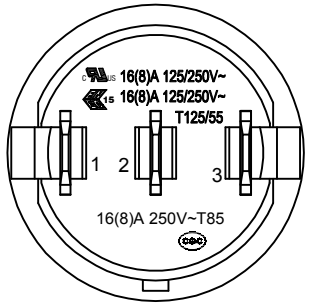

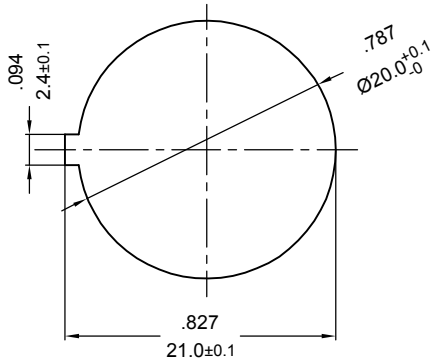

PANEL CUTOUT DIMENSION TABLE

嘉尼工程
2023.09.19
文件管制章

NOTES: TOLERANCES UNLESS OTHERWISE SPECIFIED:±.012/0.3(in/mm)

REVISION	DESCRIPTION	REVISED BY	TOLERANCES		ANGLE ½°		UNIT	mm	PART NAME	MR2 SPEC DRAWING	DWG NO
4			DRAWN BY	杨伟韶	DESIGNED BY	蔡剑	SCALE	5/3			S9497A
3											
2			CHECKED BY		APPROVED BY		DATE	2023.09.19	PART NO	MR2-120R5W-NBRB-2BNC(B0RE)	
1 2023.09.19	首次出圖	杨伟韶									