# 嘉尼企業股份有限公司CANAL ELECTRONIC CO.,LTD.

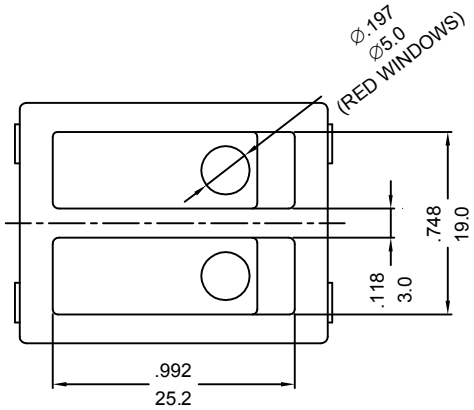


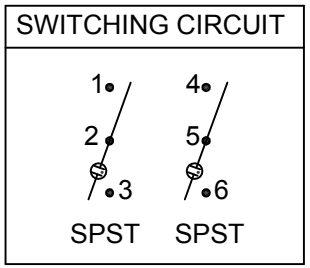


Pole on/off illuminated

## ROCKER SWITCH MODEL: R SERIES

RATING:(1) 16A 125/250VAC (UL/CUL)
(2) 20A 125VAC (UL/CUL)
(3) 16(4)A 250V~T125/55 (ENEC15/CQC) △2
DIELECTRIC WITHSTAND VOLTAGE: 1000VAC 1 MIN
INSULATION RESISTANCE: 500VDC 100MΩ (MIN)
CONTACT RESISTANCE: 20mΩ INITIAL (MAX.)
ILLUMINATED:100~125VAC

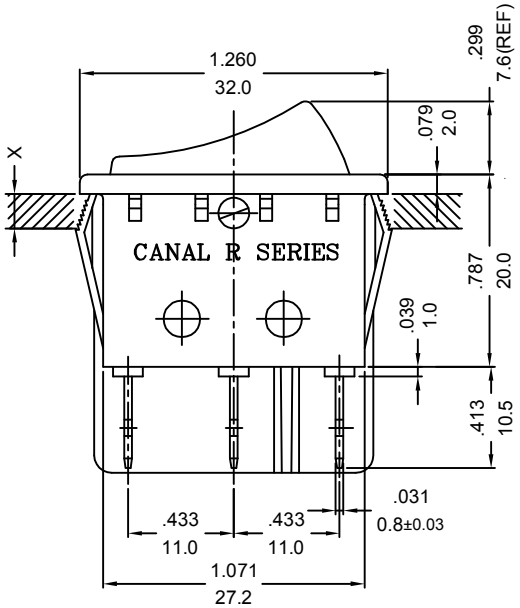


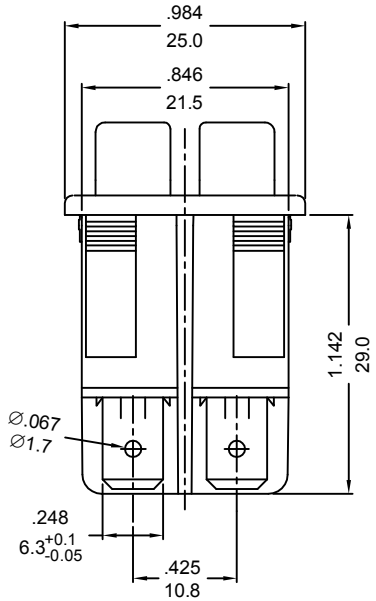


嘉尼工程
2024.07.19
文件管制章

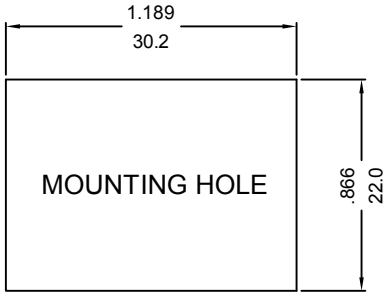


X=(0.75 TO 1.25mm)
PANEL THICKNESS

NOTE: TOLERANCES UNLESS OTHERWISE SPECIFIED:± .012/ 0.3 (in/mm)

| REVISION | DESCRIPTION | REVISED BY | TOLERANCES | | | | ANGLE ½° | UNIT | mm | PART NAME | R SPEC DRAWING | DWG NO |
|---|---|---|---|---|---|---|---|---|---|---|---|---|
| △4 | | | DRAWN BY | 袁友軍 | DESIGNED BY | 聶 明 | SCALE | 5/4 | | | | S4985B |
| △3 | | | | | | | | | | | | |
| △2 2024.07.19 | 取消VDE，改用ENEC15 | 达志各 | CHECKED BY | | APPROVED BY | | DATE | 2012.12.12 | | PART NO | R210-2CRC-**N-NC | |
| △1 2012.12.12 | 首次出圖 | 袁友軍 | | | | | | | | | | |