HITANO
ENTERPRISE CORP. ®

ENR SERIES

- **These are non-polar capacitors designed for circuits with reversing polarity.**
- **Tolerance of ± 10% (K) if required can also be available on request.**
- **Life time 105℃ 1000 Hours**

Characteristics

Voltage Range	10~100V							160V	
Capacitance Range	0.47~1000uF								
Temperature Range	-40 ~ + 105℃							-25 ~ + 105℃	
Capacitance Tolerance	+20% -20% (at 20℃, 120Hz)								
Leakage Current	I=0.03C or 3uA max. (After 3 minutes)								
Dissipation Factor(tan δ)	Rated voltage	10V	16V	25V	35V	50V	63V	100V	160V
(at 20℃, 120Hz)	tan δ	0.25	0.20	0.18	0.15	0.13	0.10	0.10	0.15
Stability at Low Temperature	Impedance ration at 120Hz								
	Rated Voltage (V)	10V	16V	25V	35V	50V	63V	100V	160V
	Z-25℃/Z 20℃	3	2	2	2	2	2	2	2
	Z-40℃/Z 20℃	6	4	3	3	3	3	3	-
Load Life	After rated voltage has been applied on each polarity for 500 hours at 105℃ (Total 1000 hours)	Capacitance change	Within ±15% of initial value						
		D.F. (tan δ)	150% of less of initial specified value						
		Leakage current	Initial specified value of less						

Diagram of dimensions

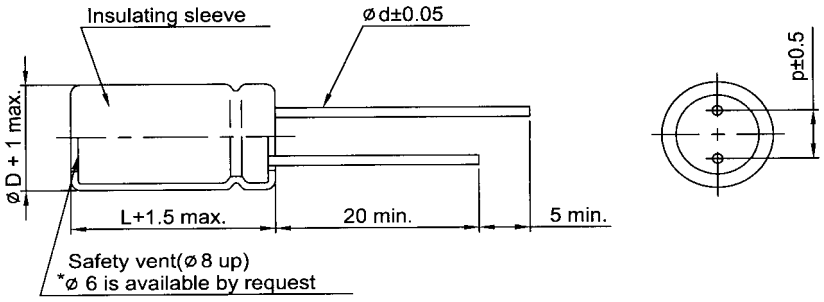

Dϕ	5	6.3	8	10	13	16	18
F	2.0	2.5	3.5	5.0	5.0	7.5	7.5
dϕ	0.5		0.5			0.8	

Case Size of Standard Products & Maximum Ripple Current (mA rms 105℃ 120Hz)

Cap. \ WV	10V		16V		25V		35V		50V		63V		100V		160V	
uF	Size	R.C.	Size	R.C.	Size	R.C.	Size	R.C.	Size	R.C.	Size	R.C.	Size	R.C.	Size	R.C.
0.47									5x11	8	5x11	9	5x11	10	5x11	12
1									5x11	12	5x11	14	5x11	15	6.3x11	18
2.2									5x11	17	5x11	20	6.3x11	22	8x12	28
3.3									5x11	23	5x11	25	6.3x11	22	8x12	37
4.7									5x11	30	5x11	30	8x12	36	10x13	45
10					5x11	34	5x11	38	6.3x11	50	6.3x11	52	8x12	52	10x16	79
22			5x11	53	6.3x11	55	6.3x11	65	8x12	85	8x12	88	10x16	120	13x21	140
33			5x11	62	6.3x11	72	8x12	75	8x12	89	10x13	115	10x21	175	13x26	230
47	5x11	79	6.3x11	90	6.3x11	96	8x12	107	10x13	123	10x16	150	13x21	187	16x26	265
100	6.3x11	99	8x12	123	8x12	152	10x13	198	10x20	220	13x21	295	16x26	399	18x36	450
220	8x12	157	10x13	234	10x13	245	10x21	320	13x21	340	13x26	420	16x32	520		
330	10x13	235	10x13	255	10x16	310	13x21	370	16x26	500						
470	10x13	290	10x16	360	13x21	420	13x26	495	16x32	590						
1000	10x21	430	13x21	511												