SCHEMATIC	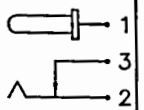
MODEL NO	C

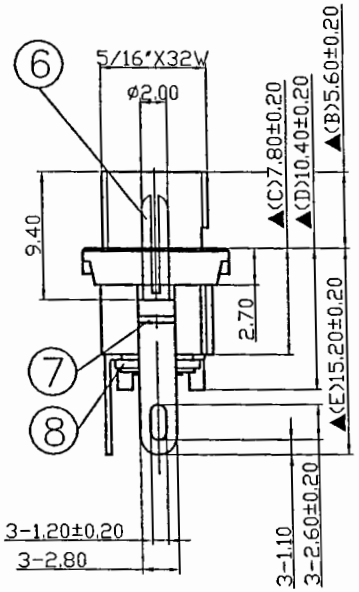

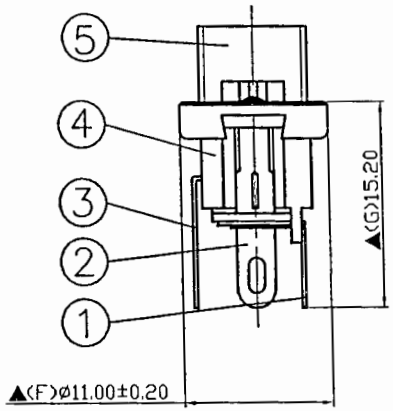

旭全 緯密工業(深圳)有限公司 2021-06-16 圖面發行

文管中心发行 2021-06-16

NO.	Description	Material	Q'TY	Finish
10.	Washer	0.3T Steel	1	Nickel Plated
9.	Nut	Low Lead Brass Rod	1	Nickel Plated
8.	Insulator B	Red Vulcanited Fibre	1	Red Color
7.	Insulator A	Red Vulcanited Fibre	1	Red Color
6.	Pin(2.0ø)	Low Lead Brass Rod	1	Nickel Plated
5.	Bushing	Low Lead Brass Rod	1	Nickel Plated
4.	Housing	PBT+15%	1	Black Color
3.	Break Terminal	0.3T Brass	1	Silver Plated
2.	Sleeve Spring	0.4T Phosphor Bronze	1	Silver Plated
1.	Pin Terminal	0.3T Brass	1	Silver Plated

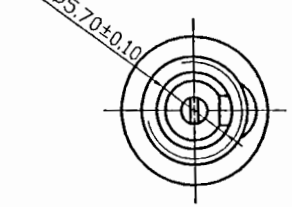

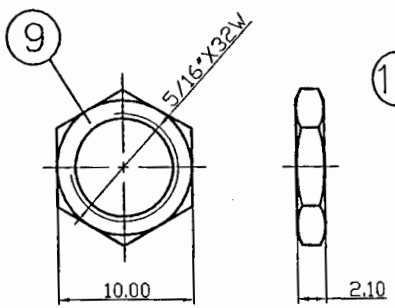

NUT

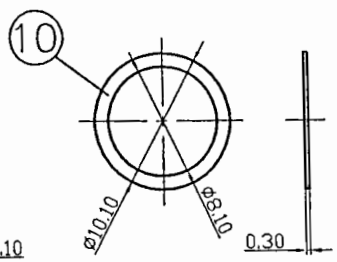

WASHER

S.C. PRECISION INDUSTRIAL CO., LTD. 旭全

DATE	DWN	CHKD	APVD	MANAGER
06.16.2021	王平華			

RoHS&SVHC Compliant

PART NAME :DC POWER JACK | PART NUMBER: SCD554CCS103B00L | VERSION:3.0

TOLERANCE :±0.3mm UNLESS OTHERWISE SPECIFIED | UNIT:mm | SCALE:1/1

SPECIFICATIONS:
Contact Resistance : 30mΩ max
Current Rating : Max 5.0A , 24VDC
Insulation Resistance : 100MΩ min. at DC 500V
Dielectric Withstand Voltage : AC 500V for one minute
Remark: ▲: The Most Important Dimension