	Description	Date	Drawn	Approved
0	原圖	2017/03/20	許宏誠	

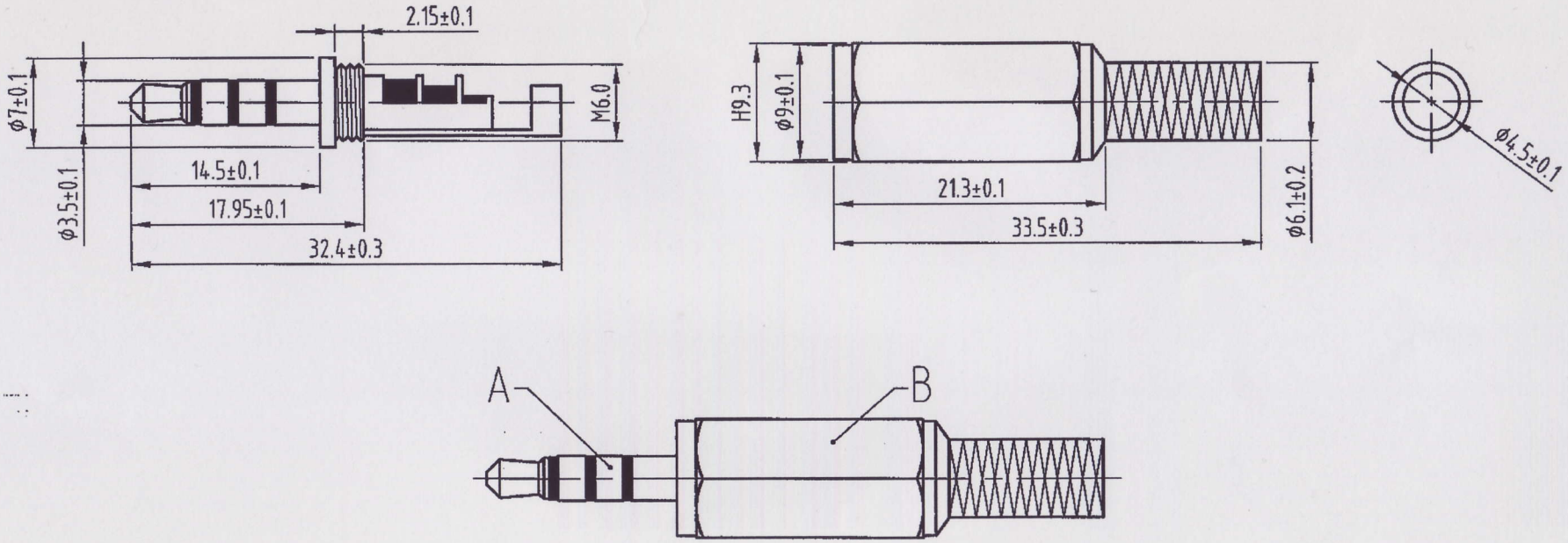

NO	Description	Unit	Materials	Finish/Color	Part NO.
B	Shell	1	Plastic	Black	
A	Body	1	Brass	Nickel	

All Dimensions are Millimeters

Unless Otherwise Specified Tolerances
0.5~6= ±0.1
6~30= ±0.3
30~120= ±0.5
120~315= ±0.8
ANGLES= ±3°

Scale 2:1 | Issue A

Approved	Checked	Drawn
		許宏誠 2017/03/20

CUSTOMER P/N.

力 代 FIRST TECH ELECTRONICS CO.,LTD(TAIWAN)
TEL:886-6-2720201-3 FAX:2720607
Website: www.firsttech.com.tw

祥 發 HSIANG FA ELECTRONIC PLASTIC FACTORY(CHINA)

力 代	CN-AP35-009NI	祥 發	MP435L
TITLE	3.5mm 4 Section Plug		
CABLE			

MORETECH

	Description	Date	Drawn	Approved
0	原圖	2017/03/20	許宏誠	

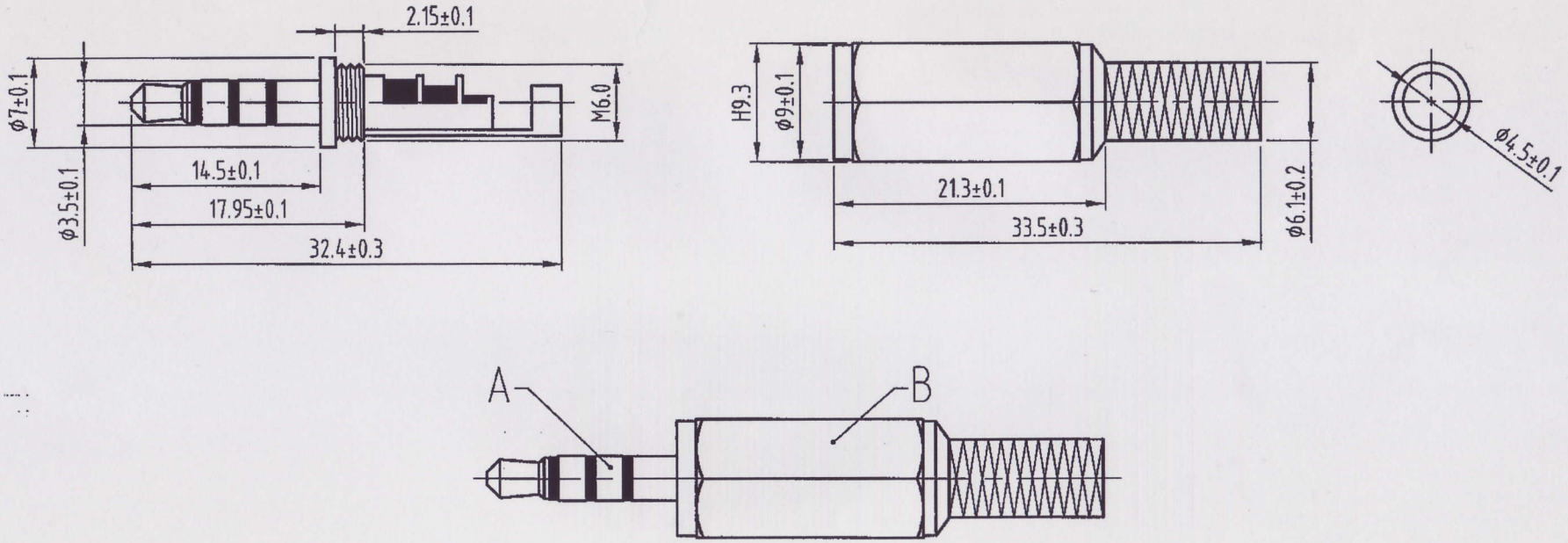

NO	Description	Unit	Materials	Finish/Color	Part NO.
B	Shell	1	Plastic	Black	
A	Body	1	Brass	Nickel	

All Dimensions are Millimeters

Unless Otherwise Specified Tolerances
0.5~6= ±0.1
6~30= ±0.3
30~120= ±0.5
120~315= ±0.8
ANGLES= ±3°

Scale 2:1 | Issue A

Approved	Checked	Drawn
		許宏誠 2017/03/20

CUSTOMER P/N.

力 代 FIRST TECH ELECTRONICS CO.,LTD(TAIWAN)
TEL:886-6-2720201-3 FAX:2720607
Website: www.firsttech.com.tw

祥 發 HSIANG FA ELECTRONIC PLASTIC FACTORY(CHINA)

力 代	CN-AP35-009NI	祥 發	MP435L
TITLE	3.5mm 4 Section Plug		
CABLE			

MORETECH