嘉尼企業股份有限公司CANAL ELECTRONIC CO.,LTD.

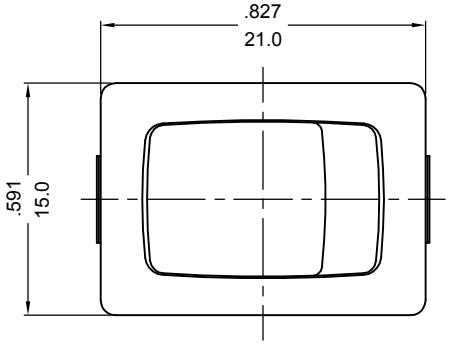

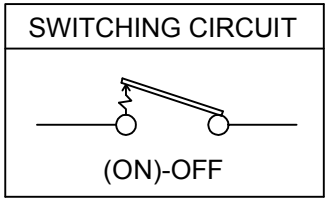

ROCKER SWITCH MODEL MR2 SERIES

RATING:10(4)A 125/250V~T55 (cURus)
10(4)A 125/250V~T125/55 (ENEC15)
10(4)A 250V~T125/55 (CQC)
DIELECTRIC VOLTAGE-WITHSTAND:1,500VAC FOR 1 MINUTE
INSULATION RESISTANCE:DC 500V 100MΩ (MIN.)
CONTACT RESISTANCE:20mΩ INITIAL (MAX.)

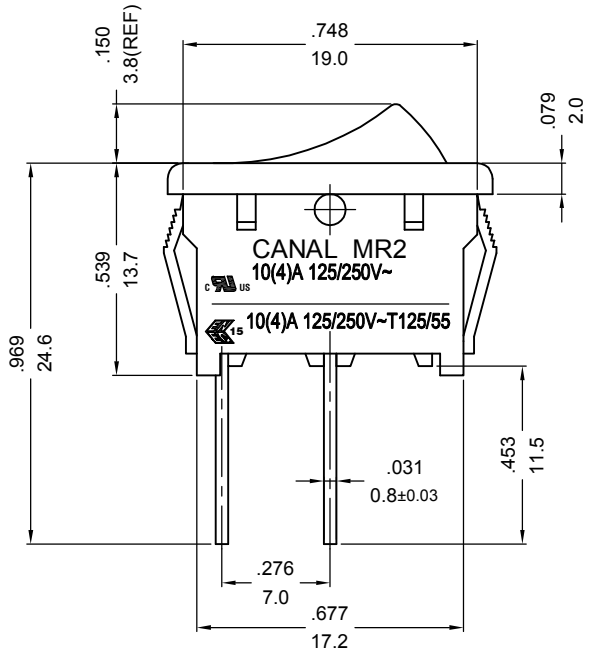

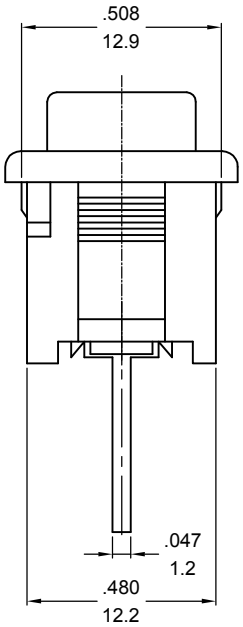

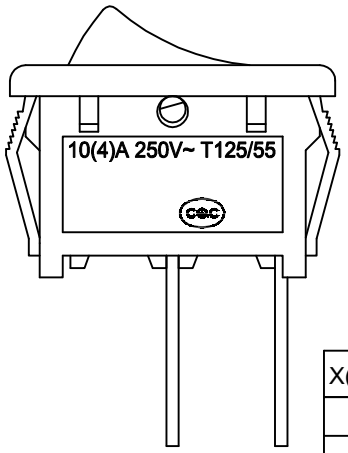

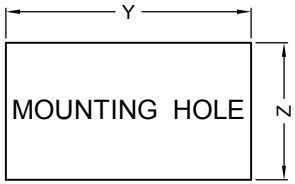

X(PANEL THICKNESS)	Y(CUTOUT DIMENSION)	Z(CUTOUT DIMENSION)
0.75~1.25mm	$19.2^{+0.1}_{-0}$mm	$12.9^{+0.15}_{-0}$mm
1.25~2mm	$19.4^{+0.1}_{-0}$mm	$12.9^{+0.15}_{-0}$mm
	$19.8^{+0.1}_{-0}$mm	$12.9^{+0.15}_{-0}$mm

PANEL CUTOUT DIMENSION TABLE

NOTE:1.TOLERANCES UNLESS OTHERWISE SPECIFIED:±.012/0.3(in/mm)

REVISION	DESCRIPTION	REVISED BY	TOLERANCES				ANGLE ½°	UNIT	mm	PART NAME	MR2 SPEC DRAWING	DWG NO
4			DRAWN BY	楊偉韶	DESIGNED BY	蔡 劍	SCALE	2/1				S9312A
3												
2			CHECKED BY		APPROVED BY		DATE	2023.05.19		PART NO	MR2-142C2N-NBBA-60NC	
1 2023.05.19	首次出圖	楊偉韶										