嘉尼企業股份有限公司CANAL ELECTRONIC CO.,LTD.

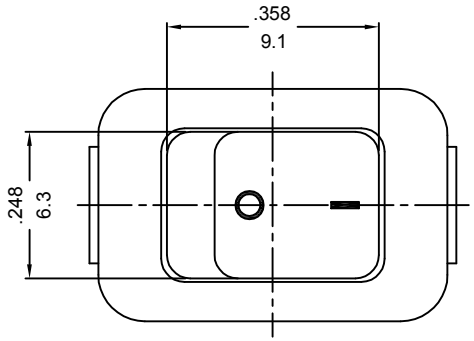

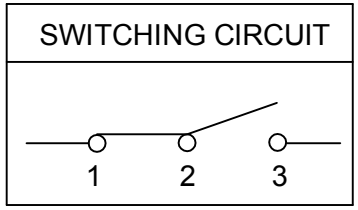

ON-ON

ROCKER SWITCH MODEL MR5 SERIES

RATING:3A 250VAC μ (cURus)
6A 125VAC μ (cURus)
3A 250V~ μT100/55 (ENEC15/CQC)
DIELECTRIC VOLTAGE-WITHSTAND:1,500VAC FOR 1 MINUTE
INSULATION RESISTANCE:DC 500V 100MΩ (MIN.)
CONTACT RESISTANCE:20mΩ INITIAL (MAX.)

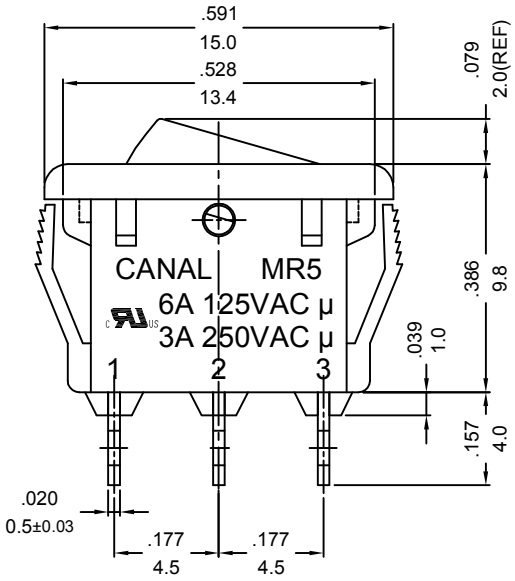

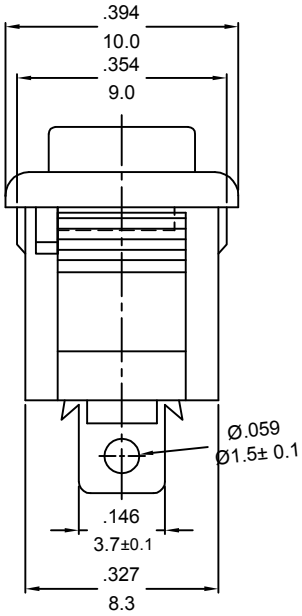

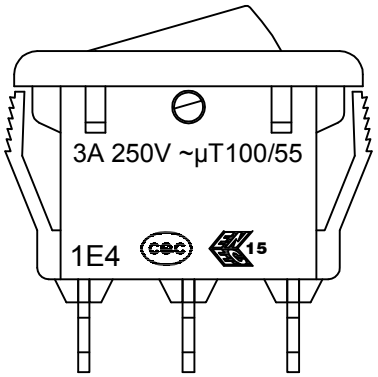

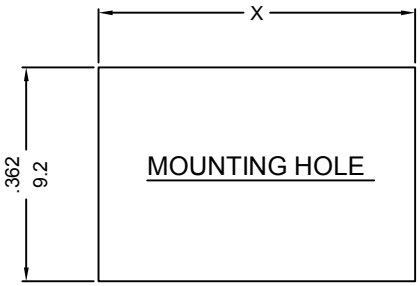

	X Cutout Dimension	Panel Thickness
A	.535/13.6 $^{+0}_{-0.1}$	0.75~1.25
B	.539/13.7 $^{+0}_{-0.1}$	1.25~2.0
C	.543/13.8 $^{+0}_{-0.1}$	2.0~2.5

NOTE: TOLERANCES UNLESS OTHERWISE SPECIFIED:± .012/ 0.3(in/mm)

REVISION	DESCRIPTION	REVISED BY	TOLERANCES				ANGLE ½°	UNIT	mm	PART NAME	MR5 SPEC DRAWING	DWG NO
4			DRAWN BY	楊偉韶	DESIGNED BY	蔡劍	SCALE	3/1				S9313A
3												
2			CHECKED BY		APPROVED BY		DATE	2023.05.19		PART NO	MR5-121F5*-N**A-0N2C	
1 2023.05.19	首次出圖	楊偉韶										