嘉尼企業股份有限公司 CANAL ELECTRONIC CO.,LTD.

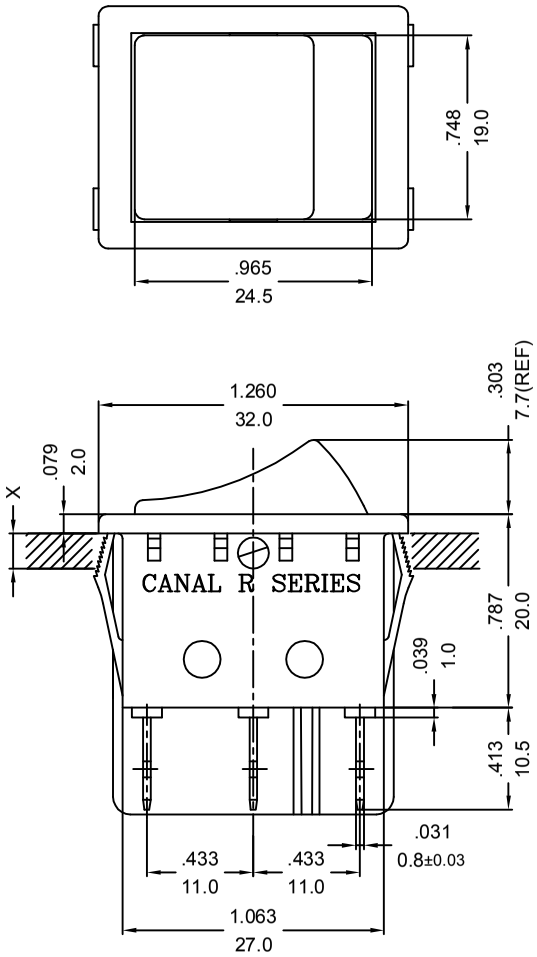

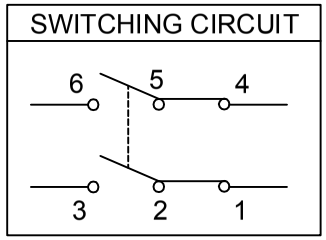

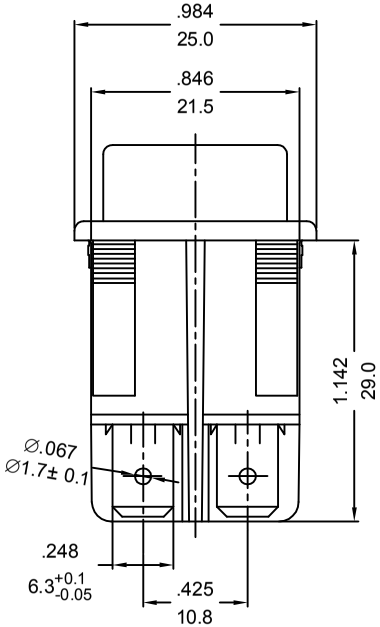

ROCKER SWITCH MODEL: R SERIES

RATING:(1) 16A 125/250VAC (UL/CUL)
(2) 20A 125VAC (UL/CUL)
(3) 16(4)A 250V~T125/55 (ENEC15/CQC) △3
DIELECTRIC WITHSTAND VOLTAGE: 1000VAC 1 MIN
INSULATION RESISTANCE:500VDC 100M Ω(MIN)
CONTACT RESISTANCE:20m Ω INITIAL(MAX.)

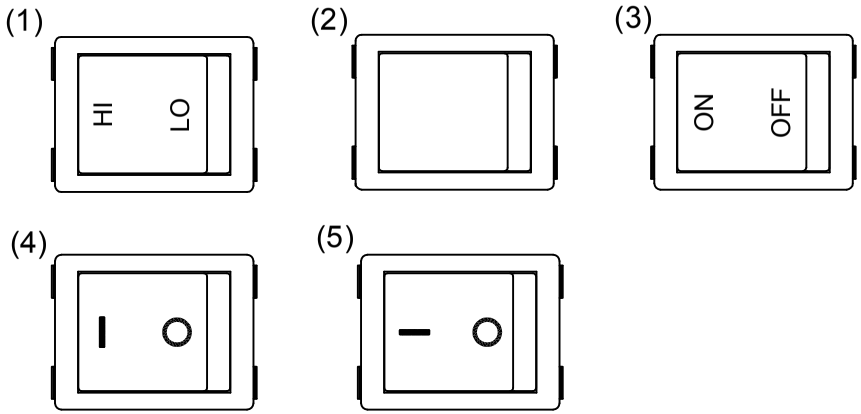

嘉尼工程
2023.05.19
文件管制章

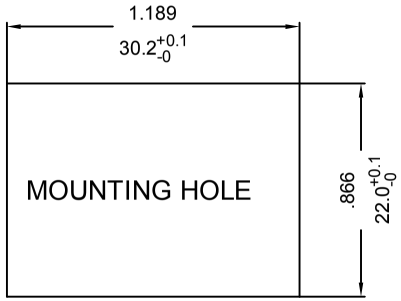

X=(0.75~2.0mm)
PANEL THICKNESS

NOTE: TOLERANCES UNLESS OTHERWISE SPECIFIED:± .012/0.3 (in/mm)

REVISION	DESCRIPTION	REVISED BY	TOLERANCES				ANGLE ½°	UNIT	mm	PART NAME	R SPEC DRAWING	DWG NO
△4			DRAWN BY	謝平凡	DESIGNED BY	蔡 劍	SCALE	5/4				S4424C
△3 2023.03.10	取消VDE，改用ENEC15	达志各										
△2 2013.01.10	整理圖面，重新出圖	袁友軍	CHECKED BY		APPROVED BY		DATE	2011.10.07		PART NO	R220-1C*N-**1-N*C	
△1 2011.10.07	首次出圖	謝平凡										