嘉尼企業股份有限公司CANAL ELECTRONIC CO.,LTD.

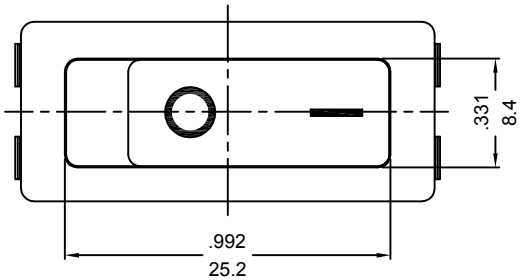

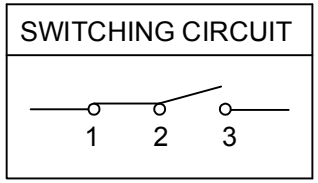

ON-ON

ROCKER SWITCH MODEL:RH SERIES

RATING: 16A 125/250VAC (UL/CUL)
20A 125VAC (UL/CUL)
16(4)A 250V~T125/55 (ENEC15/CQC) 4
DIELECTRIC WITHSTAND VOLTAGE: 1000VAC 1 MINUTE
INSULATION RESISTANCE: 500VDC 100M Ω (MIN)
CONTACT RESISTANCE: 20m Ω INITIAL (MAX.)

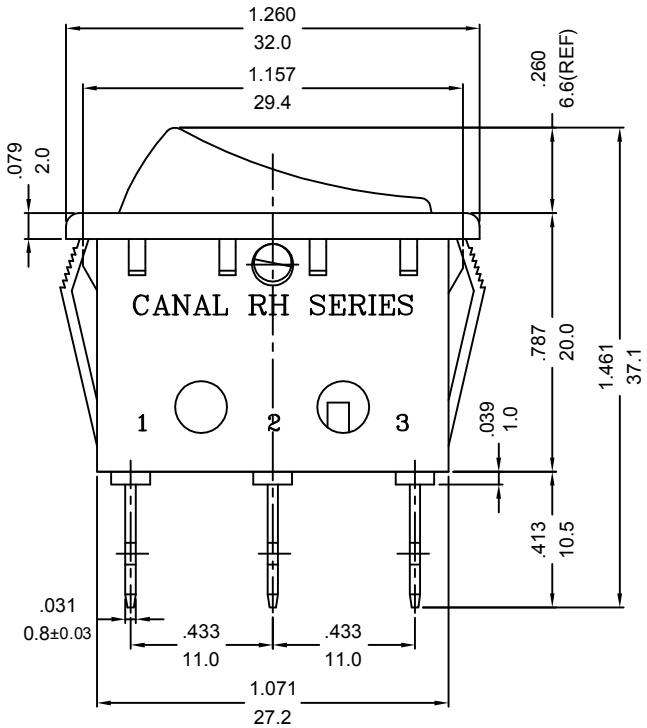

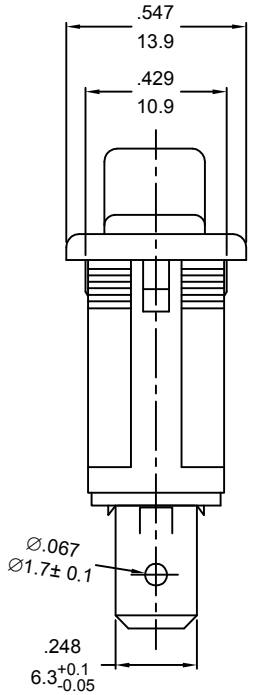

嘉尼工程
2023.05.10
文件管制章

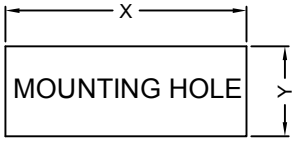

Dim.X	Dim.Y	Z=panel thickness
30.0 $^{+0.1}_{-0}$ mm	11.0 $^{+0.1}_{-0}$ mm	0.75 to 1.25mm
30.2 $^{+0.1}_{-0}$ mm	11.0 $^{+0.1}_{-0}$ mm	1.25 to 2mm
30.5 $^{+0.1}_{-0}$ mm	11.0 $^{+0.1}_{-0}$ mm	2 to 3mm

NOTE:TOLERANCES UNLESS OTHERWISE SPECIFIED:± .012/0.3 (in/mm)

REVISION	DESCRIPTION	REVISED BY	TOLERANCES				ANGLE ½°	UNIT	mm	PART NAME	RH SPEC DRAWING	DWG NO
4 2023.05.05	取消VDE，改用ENEC15	达志各	DRAWN BY	謝平凡	DESIGNED BY	蔡 劍	SCALE	5/3				S1868D
3 2016.10.20	取消CSA，重新出圖	謝平凡										
2 2009.08.26	整理圖面，重新出圖	劉義正	CHECKED BY		APPROVED BY		DATE	2007.06.25		PART NO	RH120-C5N-BBN-WC	
1 2007.06.25	首次出圖	易金平										