AS 242

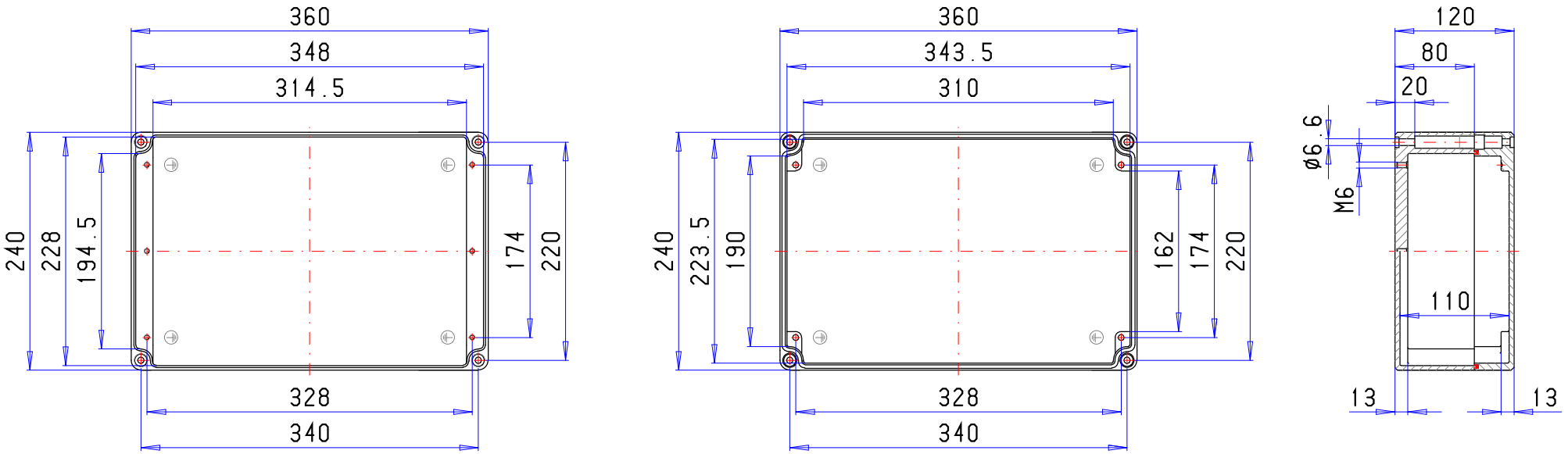
360
348
314.5
240
228
194.5
174
220
328
340
360
343.5
310
240
223.5
190
162
174
220
328
340
120
80
20
ø6.6
M6
110
13
13