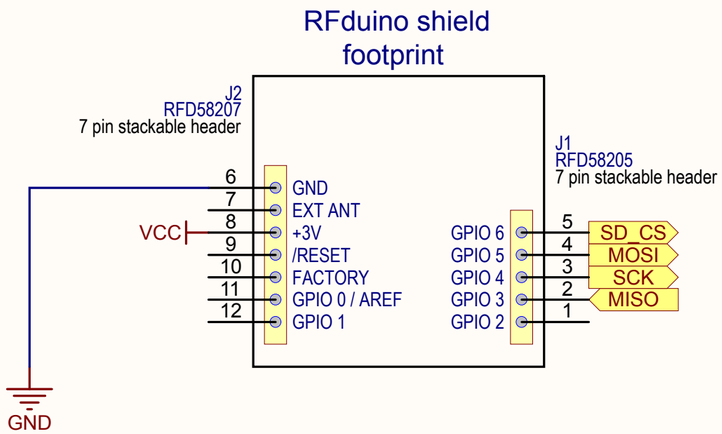

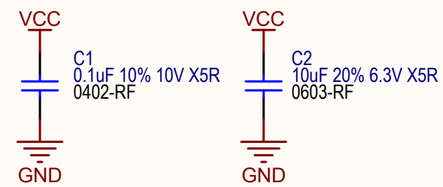

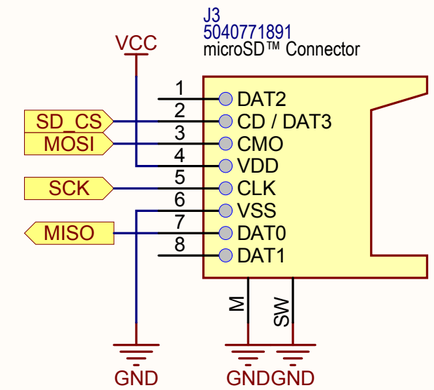

RFD22130 - RFduino microSD Shield
12/12/2013 5:12:32 PM
(C) Copyright 2013, www.RFduino.com

Title	**R414 B001**	
Size A4	Number	Revision **A**
Date: 12/12/2013	Sheet 1 of 1	